FSP 60D ….

Contrast / Differential sensor

Sensor for detecting rapid intensity differences

Dimensions

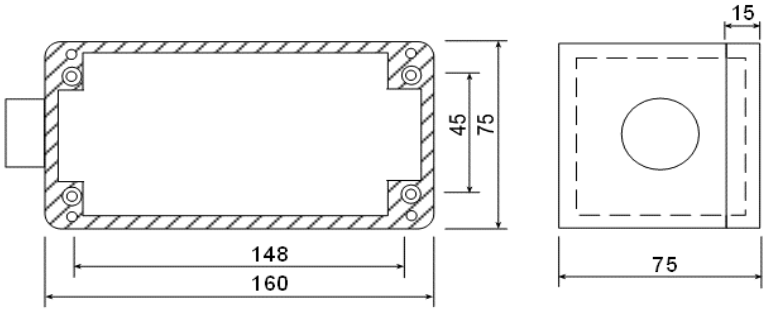

FSP60D

- switches only on fast signal changes
- optionally for rising or falling edge
- tolerance level adjustable 10kHz
- switching frequency

FSP60D -		1	8	0	6	- L		-R
Product key		Supply power	Output	Connection	Sensor head	Function		Pulse train
	0	-	-	clamps	-	A	-	-
	1	230 VAC	-	plugs	-	B	-	-
	2	24 VDC	-		-	C	red light	-
	3		-		-	D	green light	-
	4		-		-	E	-	-
	5		-		-	L	laser red	-
	6		-		lense optic	R		rising
	7		-		air purge	F		falling
	8		CMOS Relais		tubus with safety glass			

Working distance [1] (mm)	
direct (without optical fibre)	100-300
with optical fibre	50-150

1 …depending on light source and object contrast

FSP 60D ….

Contrast / Differential sensor

High-performance reflex light swith; useable with or without optical fibre

Electrical Data	
Power	24 VDC / 230 VAC
Ripple	max. 10 %
Reverse voltage protection	built in
Current consumption idle mode	max. 45 mA
Current consumption switch mode	max. 47 mA
Output current	200 mA
Short circuit protection	built in
Voltage indicator	LED green
Switch mode indicator	LED yellow
Function reserve indicator	-
Switching distance	depending on configuration (refer to table)
Switching frequency	max. 10 kHz
Readyness hold-up	1 ms
Tolerance against extraneous light	not affected (acc. EN 60947-5-2)
Output	CMOS Relais
Connection	clamp / plug connection (depending on spec. type)
Physical Data	
Light	red / green / laser red (depending on spec. type)
Aperture	0,1°/10°(depending on spec. type)
Housing	polyester housing
Protection	IP 65
Mass	1,05 kg
Ambient temperature	"-10℃ … +60℃"
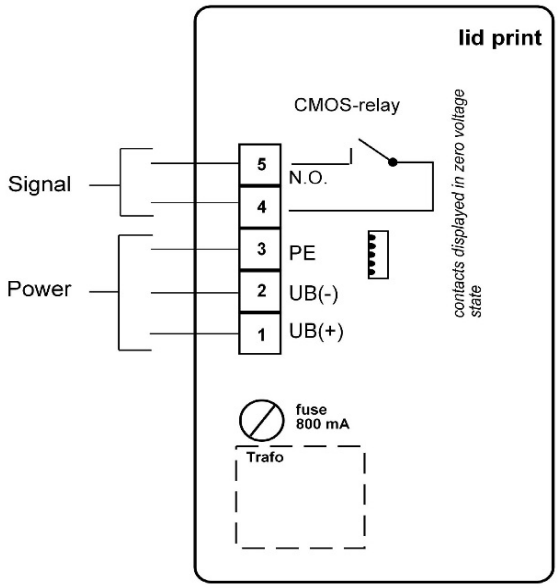
Connection scheme