SENSORIK
Austria

High-performance optical & fiber-optic Sensors

for presence control under challenging conditions (high temperatures, high pollution, great distances,...)

- ✓ Reflectance sensors & fiber-optic reflectance sensors
- ✓ Light barriers & fiber-optic light barriers
- ✓ Passive sensors
- ✓ Differential sensors

higher performance - higher flexibility - higher robustness

Table of Contents

Photo Sensors:

Introduction: (fiber-)optical sensors for presence control S0
Reflectance Sensors S1
EFS 2000 ..... *S3*
EFS 2100 ..... *S5*
EFS 1800 ..... *S7*
FSP 60 ..... *S8*
Light barriers S9
ELS 30 ..... *S9*
FSP 30 ..... *S11*
Passive Sensors FRT 30 ..... S13
Differential Sensors FSP 60D S15
Accessories S17

Optical Fibers:

Fiber-optic Light Barriers FO4
Fiber-optic Reflectance Sensors FO6
Quartz-glass fibers for NIR-applications F08
Optical fibers for illumination F09
Accessories F10

High performance (fiber-)optic Sensors for Presence Control

Function

With our sensors and light barriers you may cope with nearly all tasks in the field of presence control:

Photo sensors EFS / FSP 60:
deployed in reflectance mode or in combination with optical fiber also in light barrier mode.

Light barrier ELS 30 / FSP 30:
deployed as one-way light barrier over great distances

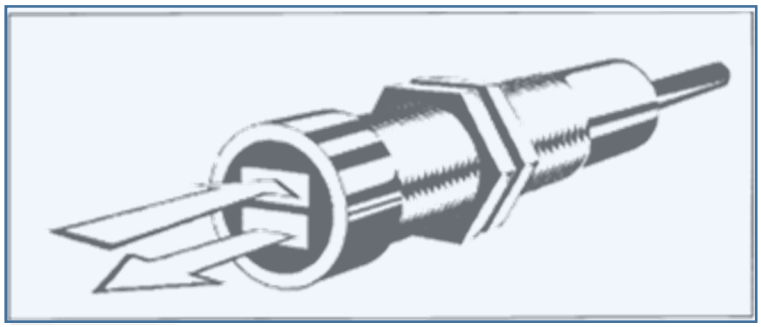

The EFS-sensors emit a clocked light signal, the photo transistor accepts only light reflected from its own source. If that reflection excels the preset threshold, the output will be switched. The threshold is adjustable via potentiometer.

The optical fiber acts like an extended eye of the photo sensor. It leads the emitted and the received light from resp. to the sensor.
Optical fibers allow the realisation of applications also in rough or hard to access industrial environments.

Due to the combination of sensor and optical fibers plenty of applications can be realised.

Fiber-optic Reflectance Sensor

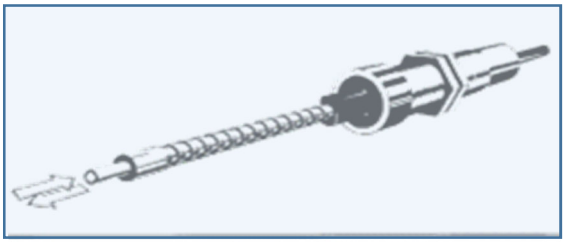

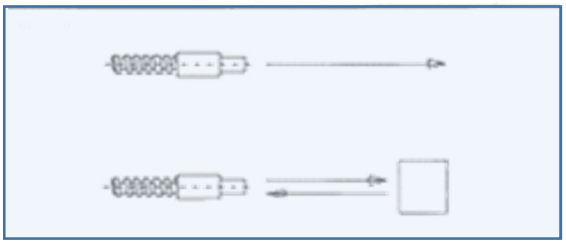

Reflectance mode

Emitter- and receiver fiber are combined in one light wave guide. If an object reaches into the aperture of the light guide, it reflects the light back to the receiver fiber – the sensor will switch.

Fiber-optic Light barrier

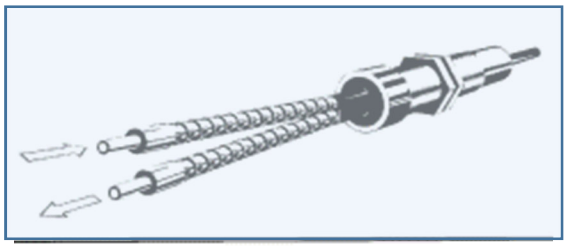

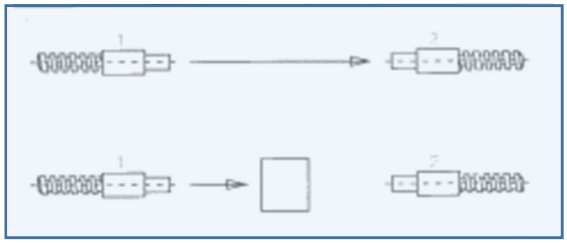

Light barrier mode

Emitter (fiber) „1“ and receiver (fiber) „2“ are placed opposite from each other, so that the emitted light reaches directly to the receiver. If an object crosses the light beam, the light doesn´t reach the receiver anymore and the sensor will switch.

higher performance - higher flexibility - higher robustness

- Reflectance sensors up to 6m sensing distance
- Fiber optic reflectance sensors up to 2,5m
- Fiber length up to 12m
- Light barrier up to 100m reach
- Fiber optic barriers up to 25m reach
- Fiber length up to 12m (opt. asymmetric)
- Optical fibers for temperatures up to 400°C, liqui d tight shell, high physical protection, accessories for pollution prevention, ...

EFS 2000- . . . .

Reflective light sensor - standard

Universal Reflective Light Sensor; useable with or without optical fibre

Dimensions

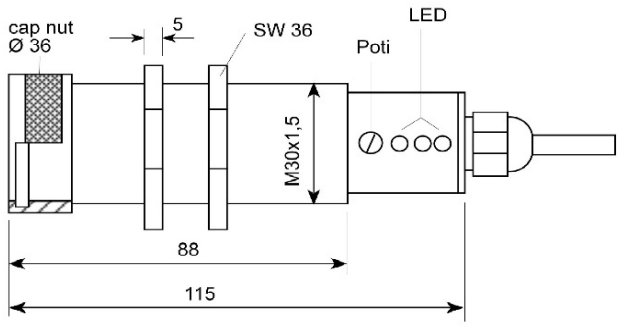

cable version

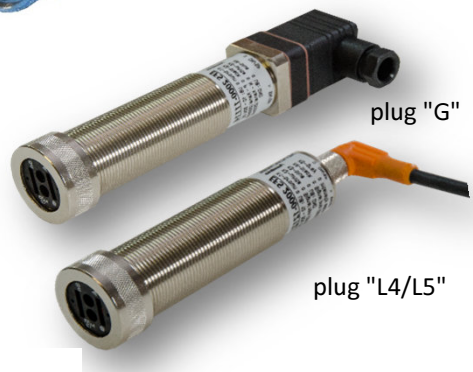

plug "G"

plug "L4/L5"

- universally applicable: for reflectance or (fibre optic) light barrier applications
- high light energy for long range / high function-reserve
- high robustness
- broad model range

EFS 2000 -		1	1	1	1	1
Product key		Light	Function	Sensor head	Output	Connection
	1	infrared	100 Hz	optical fibre	pnp+npn	cable PUR
	2	red	100 Hz, +S_n [1]	pol.-filter [2]	pnp+npn+FR[3]	plug M12/4
	3	green	1kHz	infrared filter	ONSP [4]	plug M12/5
	4		-	-	SNOP [4]	G-plug
	5		-	-	KSQM [5]	-
	6		-	wide beam 40°	analog (3-8 V)	-
	7		KSQM[4]	wide beam 67°		KSQM [5]

1 … increased switching distance (Sn)
2 … polarisation filter
3 … FR = add. function-reserve output
4 … to be specified for versions without invert switch
5 … KSQM = customer specific version

Sensing range S_n [1,2,3] (mm)	100 Hz Sn / +Sn	1 kHz	5 kHz	wide beam 40°	wide beam 67°
direct (without optical fibre)	2.500 / 3.500	2.000	1.000	1.500	500
with optical fibre	1.500 / 1.900	1.300	700		

*1 … measurement standard: polystyrene plate 400 * 400 mm*
2 … maximum values for IR variants; adjustment by potentiometer or front swith (50%)
3 … hysteresis 10%

EFS 2000 . . . .

Reflective light sensor - standard

Reflective Light Sensor in M30-cylinder; useable with or without optical fibre

Electrical Data	
Power	10 - 30 VDC
Ripple	max. 10 %
Reverse voltage protection	built in
Current consumption idle mode	max. 45 mA
Current consumption switch mode	max. 47 mA
Output current	200 mA
Short circuit protection	built in
Voltage indicator	LED green
Switch mode indicator	LED yellow
Function reserve indicator	LED red
Switching distance	depending on configuration (refer to table)
Switching frequency	100 Hz / 1 kHz (depending on spec. type)
Readyness hold-up	2,5 / 0,5 / 0,1 ms (depending on spec. type)
Tolerance against extraneous light	not affected (acc. EN 60947-5-2)
Output	pnp+npn / pnp+npn+FR / ONSP / SNOP (depending on spec. type)
Connection	cable PUR 3m / M12 plug L4/L5 / G-plug (depending on spec. type)
Physical Data	
Light	infrared / red / green (depending on spec. type)
Aperture	16°/ 40°/ 67°(depending on spec. type)
Housing	M30x1,5 mm; brass nickel-plated
Protection	IP 65
Mass	330 g
Ambient temperature	-10 ℃...+ 60 ℃

Front switch	Connection scheme		
	Cable versions	Plug versions	Output change over

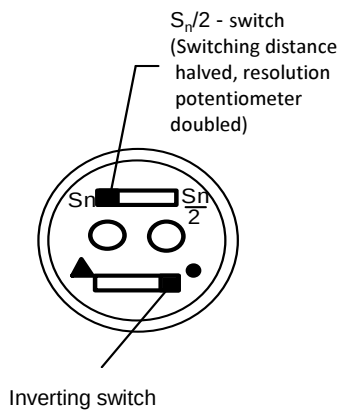

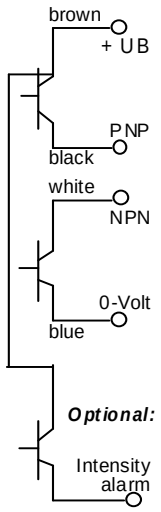

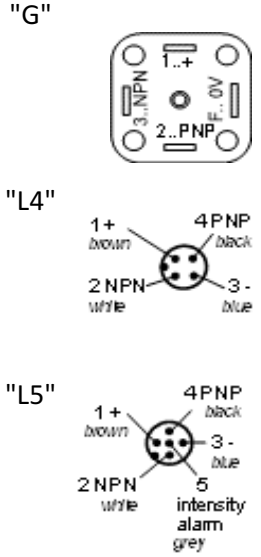

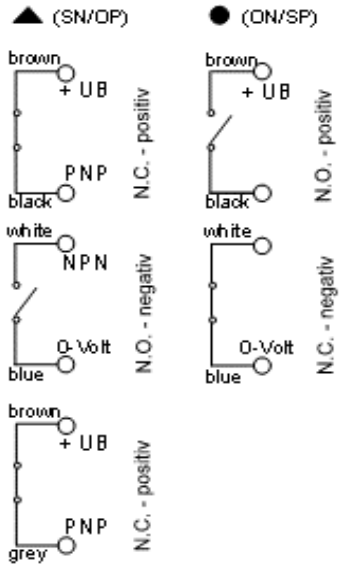

EFS 2100- . . . .

Reflective light sensor - special

Special Reflective Light Sensor: with highest sensing range or for fibre optical light barriers with extreme length

Dimensions

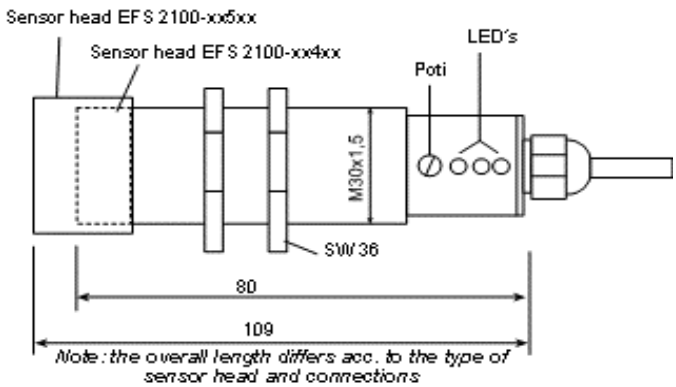

Sensor for optical fibre "60-L"

Sensor with lense optic

- for extremely long optical fibers, or highest detection distance (switching distance up to 6m)
- short design
- infrared, red or green light

EFS 2100 -		1	1	1	1	1
Product key		Light	Function	Sensor head	Output	Connection
	1	infrared	15 Hz	-	-	cable PUR
	2	red	15 Hz, $+S_n$ [1]	-	pnp+npn+FR [3]	-
	3	green	1 kHz	-	-	L5-plug
	4		5 kHz	lenses	-	-
	5		-	optical fibre "60-L"	KSQM [3]	-
	6		-		analog (3-8 V)	-
	7		KSQM [3]			KSQM [3]

1 … increased switching distance (Sn)
2 … FR = add. output: function-reserve
3 … KSQM = customer specific version

Sensing range S_n [1,2,3] (mm)	15 Hz, standard	15 Hz, $+S_n$	1 kHz	5 kHz	15 Hz, lense optic
direct (without optical fibre)	2.500	3.500	2.000	1.000	6.000
with optical fibre	1.500	1.900	1.300	700	-

*1 … measurement standard: polystyrene plate 400 * 400 mm*
2 … maximum values for IR variants; adjustment by potentiometer or front swith (50%)
3 … hysteresis 10%

Reflective Light Sensor in M30-cylinder; with lens optic or sensor head for CO optical fibre

Electrical Data	
Power	10 - 30 VDC
Ripple	max. 10 %
Reverse voltage protection	built in
Current consumption idle mode	max. 45 mA
Current consumption switch mode	max. 47 mA
Output current	200 mA
Short circuit protection	built in
Voltage indicator	LED green
Switch mode indicator	LED yellow
Function reserve indicator	LED red
Switching distance	depending on configuration (refer to table)
Switching frequency	15 Hz / 1 kHz / 5 kHz (depending on spec. type)
Readyness hold-up	33 / 0,5 / 0,1 ms (depending on spec. type)
Tolerance against extraneous light	not affected (acc. EN 60947-5-2)
Output	pnp+npn+FR / 3-8 V (depending on spec. type)
Connection	cable PUR 3m / M12 plug L5 (depending on spec. type)
Physical Data	
Light	infrared / red / green (depending on spec. type)
Aperture	16°/ 3°(depending on spec. type)
Housing	M30x1,5 mm; brass nickel-plated
Protection	IP 65
Mass	330 g
Ambient temperature	-10 ℃...+ 60 ℃

	Connection scheme		
	Cable versions	Plug versions	Output change over
	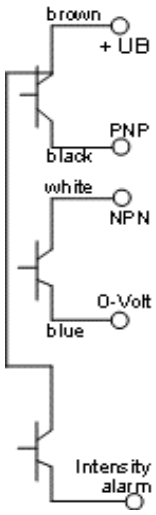	"L5" 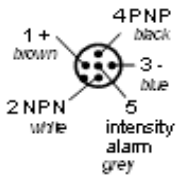	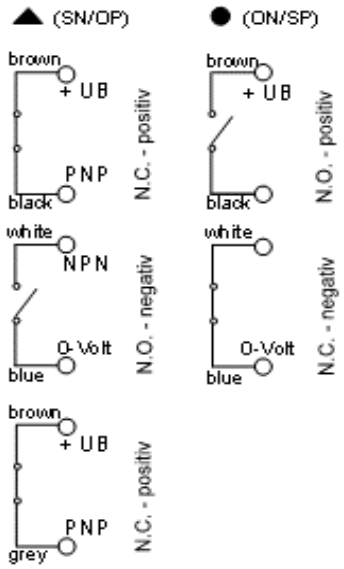

EFS 1800- . . . .

Reflective light sensor - special

Reflective Light Sensor; with optical fibre also applicable as light barrier

Dimensions

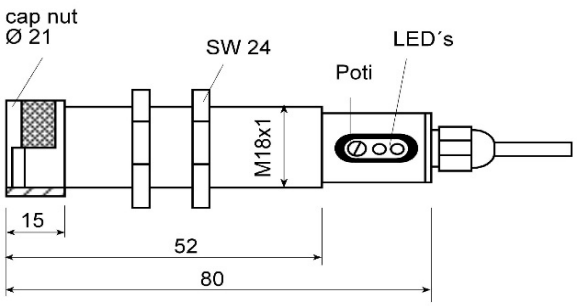

cable version

plug version

- compact size
- up to 1000 mm range

EFS 1800 -		1	1	1	1	1
Product key		Light	Function	Sensor head	Output	Connection
	1	infrared	1kHz	optical fibre	pnp+npn	cable PUR
	2	red		pol.-filter [1]		plug M12/4
	3					-
	4					-
	5					-
	6					-
	7					KSQM [2]

1 … polarisation filter
2 … KSQM = customer specific version

Sensing range S_n [1,2,3] (mm)	1 kHz
direct (without optical fibre)	1.000
with optical fibre	500

*1 … measurement standard: polystyrene plate 400 * 400 mm*
2 … maximum values for IR variants; adjustment by potentiometer or front swith (50%)
3 … hysteresis 10%

EFS 1800 . . . .

Reflective light sensor - special

Reflective Light Sensor; with optical fibre also applicable as light barrier

Electrical Data	
Power	10 - 30 VDC
Ripple	max. 10 %
Reverse voltage protection	built in
Current consumption idle mode	max. 25 mA
Current consumption switch mode	max. 47 mA
Output current	200 mA
Short circuit protection	built in
Voltage indicator	LED green
Switch mode indicator	LED yellow
Function reserve indicator	LED red
Switching distance	depending on configuration (refer to table)
Switching frequency	1 kHz (depending on spec. type)
Readyness hold-up	< 300 ms
Tolerance against extraneous light	not affected (acc. EN 60947-5-2)
Output	pnp+npn
Connection	cable PUR 3m / M12 plug L4 (depending on spec. type)
Physical Data	
Light	infrared / red (depending on spec. type)
Aperture	16°
Housing	M18x1 mm; brass nickel-plated
Protection	IP 65
Mass	200 g
Ambient temperature	-10 ℃...+ 60 ℃

Front switch	Connection scheme		
	Cable versions	Plug versions	Output change over
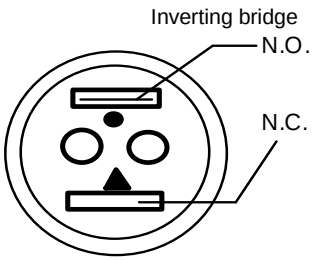	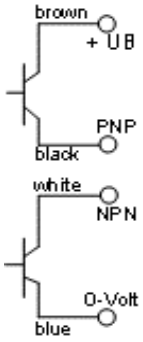	L4: 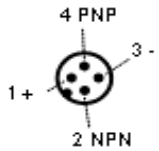	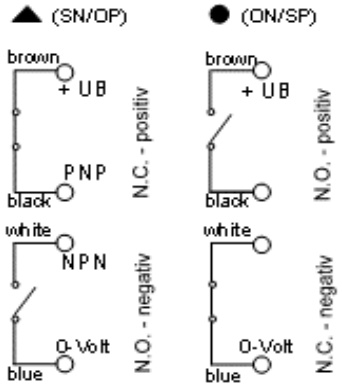

FSP 60 …

Photo sensor universal

High-performance Reflective Light Sensor in polyester-housing; with optical fibre deployable as scanner or light barrier

Dimensions

FSP 60-A2/A3/A4- …

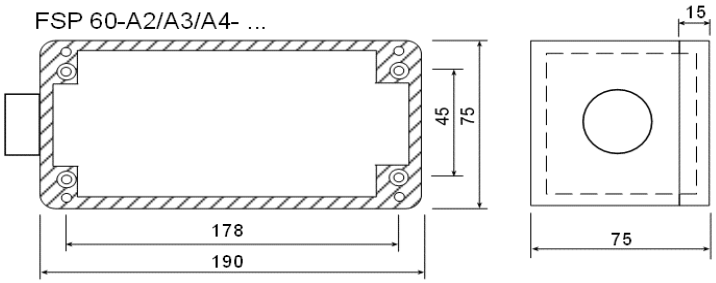

FSP 60-V-….

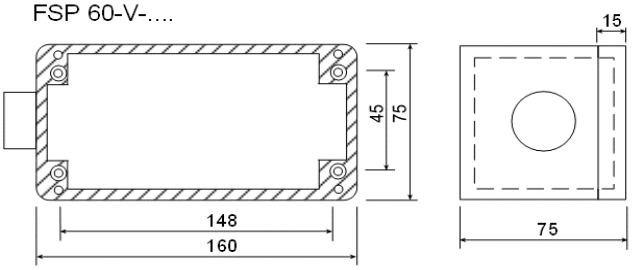

FSP60A2
(clamp connection)

FSP60A4
(plug connection)

- highest intensity
- switching distance up to 6 m (without optical fibre)
- especially for harsh environmental conditions
- professional pollution monitoring

FSP60	**A2 -**		**1**		**2**	**0**	**2**	**- E**	
Product key	**Intensity monitoring**		**Supply power**		**Outputs** [1]	**Connection**	**Sensor head**	**Function**	
	A2	intensity display	0	-	no relay	clamps	-	A	1 kHz
	A3	analog intensity signal	1	230 VAC	2x PNP (inv.)	plugs	-	B	5 kHz
	A4	display & analog signal	2	24 VDC	2x relay change		optical fibre CO/60-L	C	red light
	V	alarm signal [2]	3	115 VAC	2x N.O. + RC		optical fibre 30-L/R	D	green light
	K	KSQM [3]	4		2x N.C. + RC		IR-filter	E	+ S_n [4]
			5		N.C. + N.O. + RC		cone & IR-filter	S	++ S_n [4]
			6				lenses	W	wide beam
			7				air purge		

1 … switching output & pollution alarm
2 … pollution alarm signal: relay change (RC) or PNP
3 … KSQM = customer specific version
4 … increased switching distance (+Sn / ++Sn)

Sensing range S_n [1,2,3] (mm)	15 Hz (+S_n / ++S_n)	15 Hz, lense optic	15 Hz,wide beam	1 kHz	5 kHz
direct (without optical fibre)	2.500 / 3500	6.000	1.500	2.000	1.000
with optical fibre	1.500 / 1.900	-	500	1.300	700

*1 … measurement standard: polystyrene plate 400 * 400 mm*
2 … maximum values for IR variants; adjustment by potentiometer or optional front switch (50%; only sensor head type 3)
3 … hysteresis 10%

High-performance Reflective Light Sensor; usable with / without optical fibre

Electrical data	
Power	24 VDC / 115 VAC / 230 VAC
Ripple	max. 10 %
Reverse voltage protection	built in
Current consumption idle mode	max. 45 mA
Current consumption switch mode	max. 47 mA
Output current	200 mA
Short circuit protection	built in
Voltage indicator	LED green
Switch mode indicator	LED yellow
Function reserve indicator	LED red
Switching distance	depending on spec. type (refer to table)
Switching frequency	15 Hz / 1 kHz / 5 kHz (depending on spec. type)
Readyness hold-up	33 / 0,5 / 0,1 ms (depending on spec. type)
Tolerance against extraneous light	not affected (acc. EN 60947-5-2)
Switching output	2x transistor / relay change / relays; opt. 4-20mA (depending on spec. type)
Connection	clamp / plug connection (depending on spec. type)
Physical Data	
Light	infrared / red / green (depending on spec. type)
Aperture	16°/ 40° (depending on spec. type)
Housing	polyester housing
Protection	IP 65
Mass	1,05 - 1,2 kg
Ambient temperature	"-10℃ … +60℃/ +40℃"

Connection scheme

Versions with clamp connection

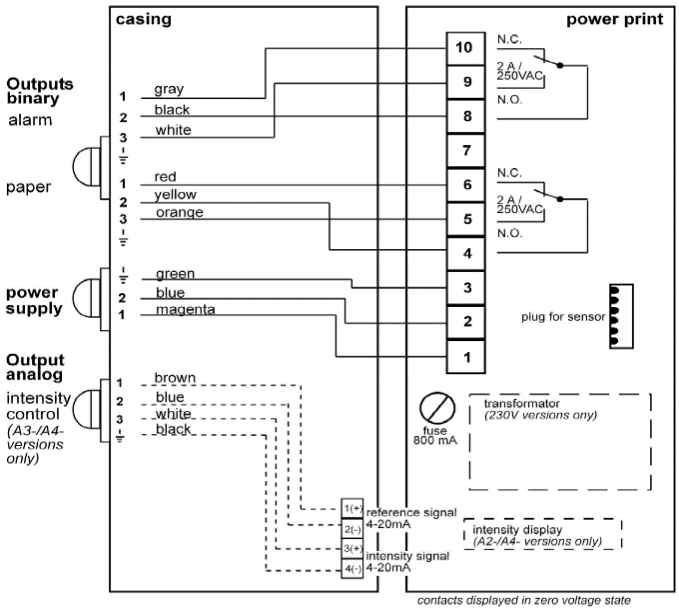

Versions with plug connection

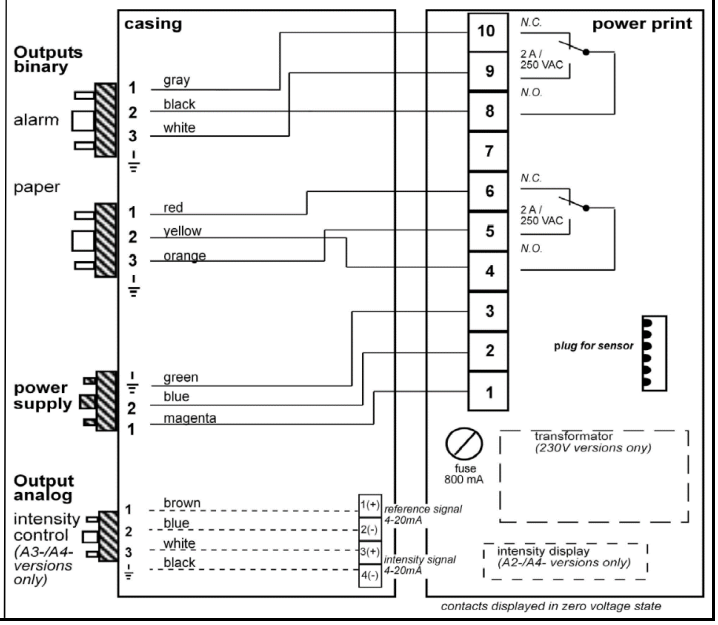

ELS 30-6 / ELS 30-7 … One-way Light barrier

High-performance Light Barrier in M30 cylinder; for robust industrial use

Dimensions

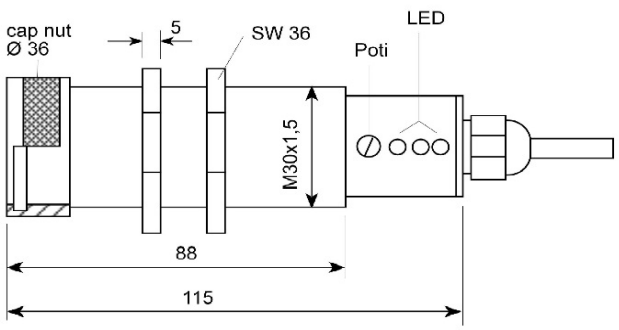

ELS 30 emitter & receiver
(plug version)

- high light energy
- reach - up to 100 m
- high tolerance against pollution
- high tolerance against lateral offset
- insensitive against extraneous light (ELS 30-7)

ELS 30 -	**6 -**		**S -**		**1**		**1**	**1**	**1**
Product key	**Extraneous light**		**Emitter / Receiver**		**Function**		**Sensor head**	**Output**	**Connection**
			S	emitter	0	-	protective glass	none [2]	-
			E	receiver	1	100 Hz	optical fibre	pnp+npn	cable PUR
					2	-	polarisation filter	pnp+npn+FR[3]	plug M12/4
					3	1 kHz	-	-	-
					4		-	-	-
					5		-	-	-
	6	sensitive			6		lense optic	analog (3-8 V)	plug M9/4
	7	insensitive [1]			7			-	KSQM [4]
					8			-	
					9			none [2]	

1 … with synchro-cable
2 … emitter (no output): 0.. ELS30-6; 9 .. ELS30-7
3 … FR = add. function-reserve output
4 … KSQM = customer specific version

Reach [(1,2)] (m)	protective glass, polarisation filter	lense optic	optical fibre
	30	100	20

1 … maximum values for IR variants; adjustment by potentiometer
2 … hysteresis 10%

High-performance Light Barrier; with / without synchro-cable

Electrical Data	
Power	10 - 30 VDC
Ripple	max. 10 %
Reverse voltage protection	built in
Current consumption idle mode	max. 45 mA
Current consumption switch mode	max. 50 mA
Output current	200 mA
Short circuit protection	built in
Voltage indicator	LED green
Switch mode indicator	LED yellow
Function reserve indicator	LED red
Switching distance	depending on configuration (refer to table)
Switching frequency	100 Hz / 1 kHz (depending on spec. type)
Readyness hold-up	33 ms
Tolerance against extraneous light	not affected (acc. EN 60947-5-2)
Output	pnp+npn / pnp+npn+FR (depending on spec. type)
Connection	cable PUR 3m / M12 plug L4/L5 (depending on spec. type)
Physical Data	
Light	IR 880nm
Aperture	10°
Housing	brass nickel-plated
Protection	IP 65
Mass	2 x 400 g
Ambient temperature	"-10℃ … +60℃"

Front switch	Connection scheme		
	Cable versions	Plug versions	Output change over

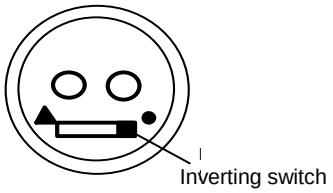

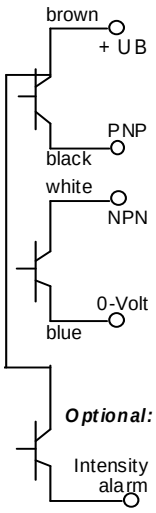

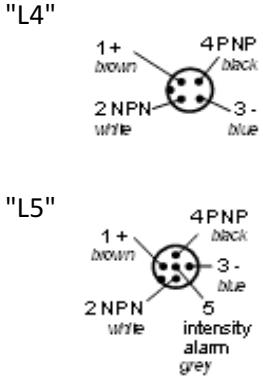

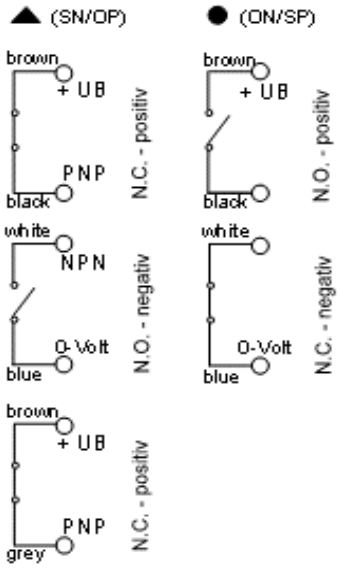

FSP 30-6 / FSP 30-7 …

One-way Light barrier

High-performance Light Barrier in polyester-housing

Dimensions

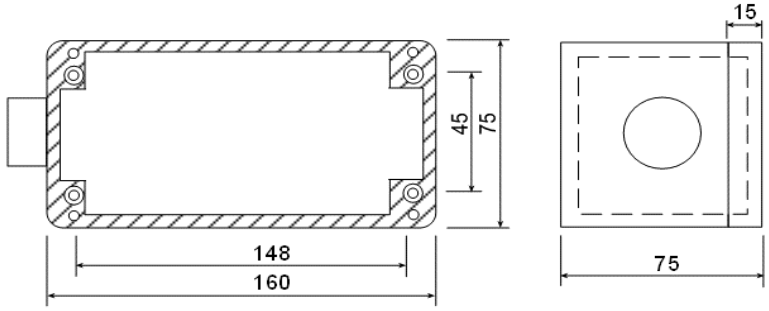

FSP 30 transmitter & receiver
(clamp version)

- highest intensity
- reach: up to 30 m / 100 m
- external light tolerant (FSP 30-7)
- especially for harsh environmental conditions
- high tolerance against lateral offset
- opt. protective equipment against pollution

FSP30 -	6 -		E -		1		2	0	3	- E	
Product key	Extraneous light		Emitter / Receiver		Voltage		Output	Connection	Sensor head	Option	
			S	emitter	0	via emitter	none [2]	clamps	protective glass	A	-
			E	receiver	1	230 VAC	PNP/NPN	plugs	-	B	-
					2	24 VDC	relay change		optical fibre "CO"	C	-
					3	115 VAC	2x N.O. relays		pol.-filter (PF)	D	-
					4		2x N.C. relays		IR-filter/ PF [3]	E	+ range [4]
					5		N.C. + N.O. relay		lens optic	L	-
	6	sensitive			6		-		protective cone+PF	K	KSQM [5]
	7	insensitive [1]			7		-		prot.cone+IR-F/PF[3]	S	heating
					8		-			V	FR-signal [6]
					9		none [2]				

1 … with synchro-cable
2 … emitter (no output) 0.. FSP30-6; 9 .. FSP30-7
3 … transmitter infrared-filter; receiver polarisation filter
4 … increased range
5 … KSQM = customer specific version
6 … FR = add. output: function-reserve (relay change)

Reach (1,2) (m)	standard (polfilter, IR-filter)	lens optics	optical fibre
direct (w/o optical fibre)	30	100	20

1 … maximum values for IR variants; adjustment by potentiometer or front switch (50%)
2 … hysteresis 10%

High-performance Light Barrier; with / without synchro-cable

Electrical Data	
Power	24 VDC / 115 VAC / 230 VAC
Ripple	max. 10 %
Reverse voltage protection	built in
Current consumption idle mode	max. 45 mA
Current consumption switch mode	max. 50 mA
Output current	200 mA
Short circuit protection	built in
Voltage indicator	LED green
Switch mode indicator	LED yellow
Function reserve indicator	LED red
Switching distance	depending on configuration (refer to table)
Switching frequency	100 Hz/1kHz
Readyness hold-up	2,5 ms
Tolerance against extraneous light	depending on spec. type
Output	transistor / relay change / relay (depending on spec. type)
Connection	clamp / plug connection (depending on spec. type)
Physical Data	
Light	IR 880nm
Housing	polyester housing
Protection	IP 54 / IP 65
Mass	2 x 1.200 g
Ambient temperature	"-10℃ … +60℃"

Connection scheme

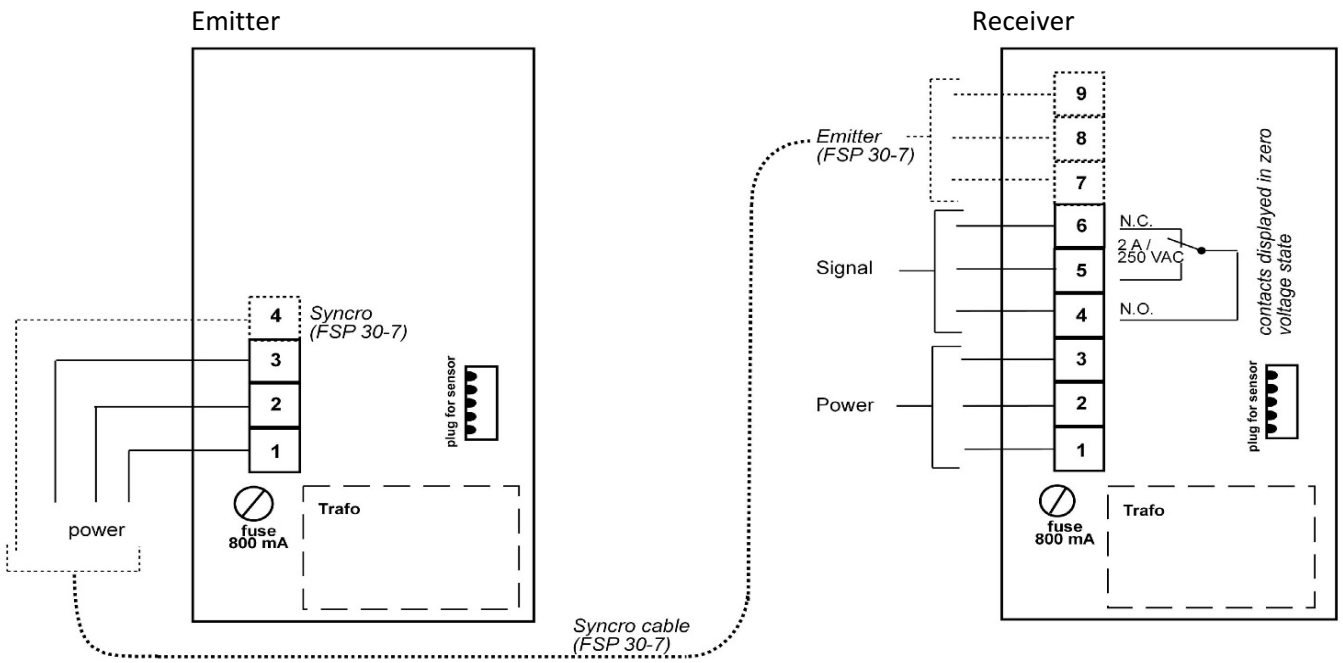

FOT 30 … Passive sensor

Light Sensor passive in M30-cylinder; usable with or without optical fibre

Dimensions

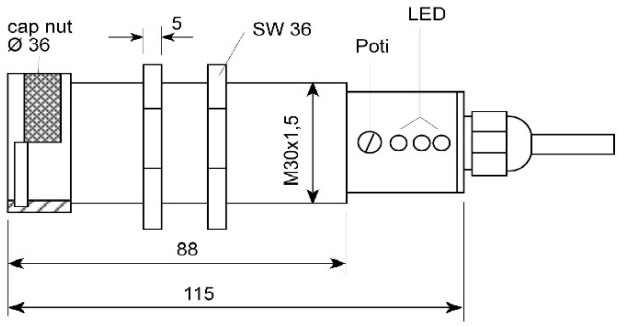

cable version

- evaluates radiation of independent light sources
- switching-threshold adjustable via potentiometer
- with optical fibre also for high temperature applications

FOT 30 -		0	1	1	1	1
Product key		Light [1]	Function	Sensor head	Output	Connection
	1	infrared & VIS [2]	100 Hz	optical fibre 30-R	pnp/npn, inv. [4]	cable PUR
	2	infrared	-	-	-	plug M12/4
	3	-	-	infrared filter	-	-
	4	-	-	lense	-	-
	5	VIS [2]	-	-	-	-
	6		-	-	relay N.O. 0,2A [4]	-
	7		KSQM [3]	-	relay N.O. 2A [4]	-
	8			-	analog (3-8 V)	
	9			protective glass		

1 … received light spectrum
2 … VIS = visible light
3 … KSQM = customer specific version
4 … switching function can be inverted by means of inv. switch

Sensing range S_n [1,2] (mm)	
	depending on extraneous light source

1 … adjustment by potentiometer
2 … hysteresis 10%

FOT 30 …

Passive sensor

Light Sensor passive in M30-cylinder; usable with or without optical fibre

Electrical Data	
Power	12- 30 VDC
Ripple	max. 10 %
Reverse voltage protection	built in
Current consumption idle mode	max. 45 mA
Current consumption switch mode	max. 47 mA
Output current	200 mA
Short circuit protection	built in
Voltage indicator	LED green
Switch mode indicator	LED yellow
Function reserve indicator	-
Switching distance	depending on configuration (refer to table)
Switching frequency	100 Hz
Readyness hold-up	< 300 ms
Tolerance against extraneous light	-
Output	pnp/npn / reed relay / relay change / 3-8 V (depending on spec. type)
Connection	cable PUR 3m / M12 plug L4 (depending on spec. type)
Physical Data	
Light	-
Aperture	16°
Housing	M30x1,5 mm; brass nickel-plated
Protection	IP 65
Mass	330g
Ambient temperature	-10 ℃...+ 60 ℃

Front switch	Connection scheme		
	transistor	relay	plug connection
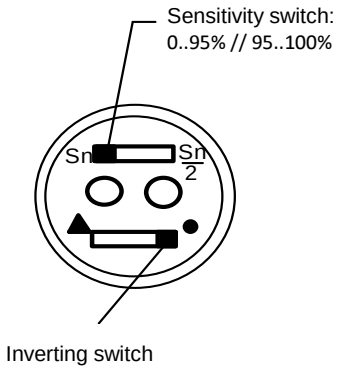	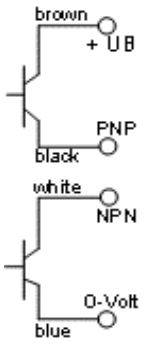	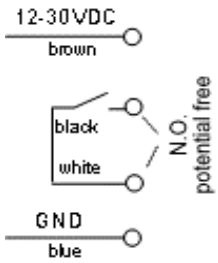	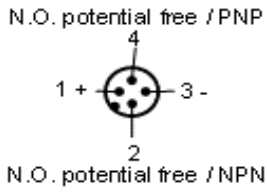

FSP 60D ….

Contrast / Differential sensor

Sensor for detecting rapid intensity differences

Dimensions

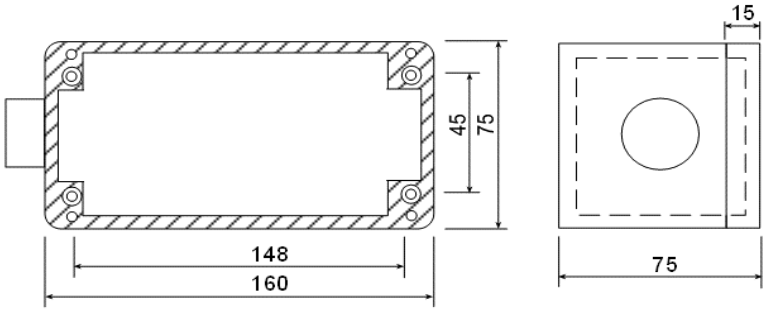

FSP60D

- switches only on fast signal changes
- optionally for rising or falling edge
- tolerance level adjustable 10kHz
- switching frequency

FSP60D -		1	8	0	6	- L		-R
Product key		Supply power	Output	Connection	Sensor head	Function		Pulse train
	0	-	-	clamps	-	A	-	-
	1	230 VAC	-	plugs	-	B	-	-
	2	24 VDC	-		-	C	red light	-
	3		-		-	D	green light	-
	4		-		-	E	-	-
	5		-		-	L	laser red	-
	6		-		lense optic	R		rising
	7		-		air purge	F		falling
	8		CMOS Relais		tubus with safety glass			

Working distance [1] (mm)	
direct (without optical fibre)	100-300
with optical fibre	50-150
1 …depending on light source and object contrast	

FSP 60D ….

Contrast / Differential sensor

High-performance reflex light swith; useable with or without optical fibre

Electrical Data	
Power	24 VDC / 230 VAC
Ripple	max. 10 %
Reverse voltage protection	built in
Current consumption idle mode	max. 45 mA
Current consumption switch mode	max. 47 mA
Output current	200 mA
Short circuit protection	built in
Voltage indicator	LED green
Switch mode indicator	LED yellow
Function reserve indicator	-
Switching distance	depending on configuration (refer to table)
Switching frequency	max. 10 kHz
Readyness hold-up	1 ms
Tolerance against extraneous light	not affected (acc. EN 60947-5-2)
Output	CMOS Relais
Connection	clamp / plug connection (depending on spec. type)
Physical Data	
Light	red / green / laser red (depending on spec. type)
Aperture	0,1°/10°(depending on spec. type)
Housing	polyester housing
Protection	IP 65
Mass	1,05 kg
Ambient temperature	"-10℃ … +60℃"

Connection scheme

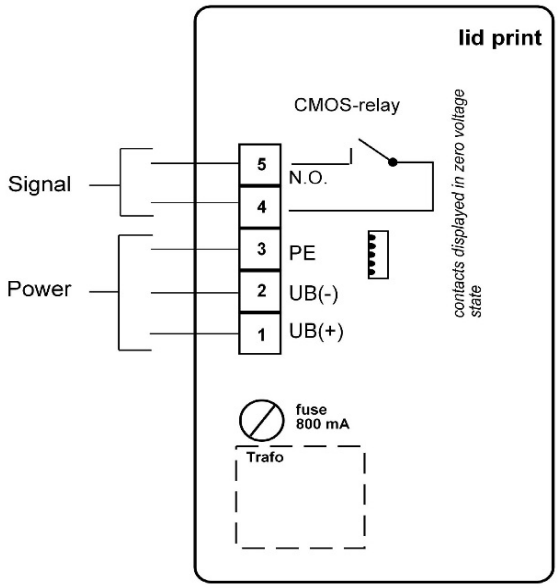

Accessories for Photo Sensors

Accessories for FSP 60

mounting frame
MR329

ball joint head
KG 325

mobile service device
with intensity display
"Intensitester"

cantilever with sensor head
for fibre optic applications

height-adjustable
consoles

mounting plate
for cantilever

Accessories for FSP 30

ball joint head
KG 325

air purge

mounting frame
MR325

Accessories for EFS / ELS / FOT

mounting bracket with ball joint
KG 18 / KG 30 .. for easy sensor
alignment

mounting angle
MW18M / MW30M

alignment help for
fiber optic sensors

mounting bracket
Ø 18 / Ø 30 mm

Accessories for high temperature applications

water-cooled heat sink:

high-temperature glass fibre optics
(silicone, metal coil, stainless steel)

for FSP- / EFS-sensors
(KKW 325 / KKW M30)

for optical fibre head
(KKW GL30)

SENSORIK
Austria

Optical fibers / Light guides

- heavy-duty fiber optics for ***presence control***
- fiber optics for tri²dent ***multi spectral sensors***
- light guides for ***illumination***

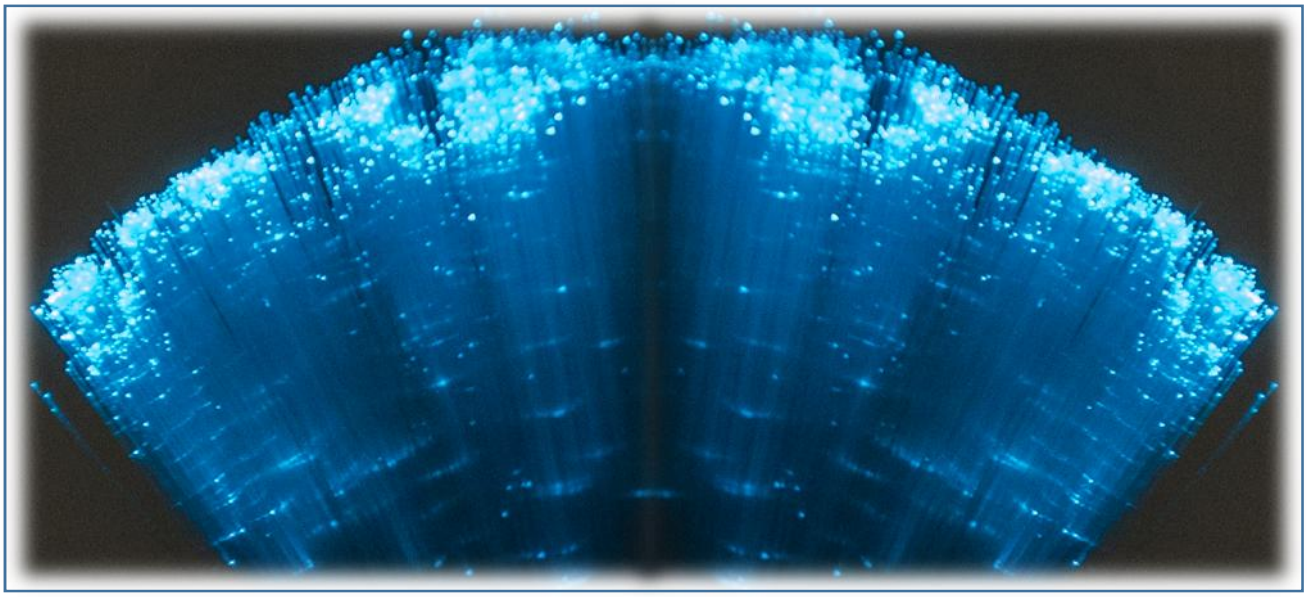

- ✓ great variety of types and special version
- ✓ for tough environmental conditions
- ✓ for temperatures up to 400°C
- ✓ up to 25 m length

Our program includes

- heavy-duty optical fibers for presence control
- optical fibers for tri²dent-**multi spectral sensors**:
- light guides for ***illumination***

- light barriers
- reflectance sensors
- moisture sensors
- NIR-material sensors
- VIS-contrast sensors

Product key

30	-	L	Z	3	/	3.000	-	Si	…

Sensor connector

18/30	Ø 18/30mm - suited for EFS 1800, EFS 2000
30	Ø 30mm - suited for EFS 2000
60	Ø 10mm - suited for FSP60Ax-xxx2
70	multiple fiber sleeve Ø 13mm - suited for FSMxx-xxx2
75	multiple fiber sleeve Ø 15mm - suited for FSMxx-xxx5
90	multiple fiber sleeve Ø 30mm - suited for FSMxx-xxx4

Function

L	light barrier mode (2 arms)
R	reflectance mode (1 arm)
LM	multiple fiber - light barrier mode
RM	multiple fiber - reflectance mode
B	illumination
RY	reflectance fiber with splitted tail

Light output

""	axial
Z	radial
Q	light line
G	threaded sleeve
E	unthreaded end sleeve (NIR fibers)
S	liquid probe
T	T-head with air purge
X	custome made

Fibre bundle

x/y	fibre bundles á x/y mm²
N	NIR quarz glass
U	UV quartz glass

Length (mm)

0-1000	100 mm scale
1.000 - 25.000	1m scale
a/b	asymetric arms with a/b mm length

Protective hose material

CO	stainless steel / teflon cover
MSC	stainless steel spiral cover
Si	silicon / stainless steel cover

Further specifications: e.g.

LS=14	length of radial end sleeve
Q=12x0,8	dimensions of light line
Gh=M8x50	dimensions of threaded sleeve
HT=400°	high temperature version
Ex in/Ex out	ATEX sensor system

Selection of the right fiber optic cable

Presence control / object recognition

Function:			
	reflectance mode		reflectance fiber optic (type "R" - 1x dual-fiber cable)
	light barrier mode		light barrier fiber optic (type "L" - 2x mono-fiber cables)
Dimensions:			
	small objects		for sensor EFS 1800 (type "18/30")
			small diameter (type 1-3)
	large sensing range/reach		for sensor EFS 2000 (type "30")
	Light barrier	/ reflectance mode	
	> 5m	> 0,5m	big diameter (typen 4 / 12 / 12P)
	> 15m	> 2m	lense optic
	length	> 5m	big diameter (types 6 / 12 / 12P)
		> 10m	stainless steel/teflon cover (CO), silicon cover (Si)
		> 15m	type 12P; stainless steel/teflon cover (CO), silicon cover (Si)
Ambient conditions			
	moist or wet environment		silicon cover (Si), stainless steel/teflon cover (CO)
	dry environment		stainless steel cover (MSC)
	temperature	< 200℃	standard, all covers available
		> 200℃	high temperature versions (X: HT=...)
		bis 270℃	stainless steel/teflon cover (CO)
		bis 300℃	silicon cover (Si)
		bis 400℃	stainless steel cover (MSC)
	mechanical strain		stainless steel/teflon cover (CO)
	distorting background		reflectance fiber optic with background elimination (type Y)

NIR-measurements*

moisture measurement	quartz glass fibers (type 2N, 3N) 1x multiple-fiber cable (type 75, 90) stainless steel/teflon cover (CO), silicon cover (Si)
concentration measurement in liquids	liquid probe 1x multiple-fiber cable silicon cover (Si)
web break detection in paper mills	quartz glass fibers (types 2N, 3N) 1x multiple-fiber cable stainless steel/teflon cover (CO) silicon cover (Si)
material sensing, coating analysis, etc.	quartz glass fibers (types 2N, 3N) 1x multiple-fiber cable silicon cover (Si)

** … moisture measurement, material sensing, concentration measurement*

Illumination

Object:		
	1-spot illumination	1 mono-fiber, connection according to light source
	multi-spot illumination	1x multiple-fiber cable
	areal illumination	great diameter
	all around illumination	great diameter, 360°-head
	mini-spot illumination (e.g. bore control)	small diameter

Choose from many different variants

Protective hose

Spezifications:	stainless steel spiral ("MSC") 	silicon / steel spiral ("Si") 	stainless steel teflon ("CO") 
max. ambient temperature:			
standard design	200 ℃	200 ℃	200 ℃
high-temperature version	400 ℃	300 ℃	270 ℃
max. length:			
light barrier	10 m	12 m	25 m
reflectance sensor	10 m	12 m	12 m
liquid-tight	no	yes	yes
breakage protection	no	no	yes
strain relief	yes	yes	yes

Light output

end sleeve axial

end sleeve radial

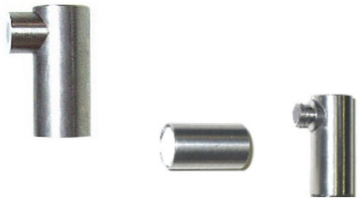

with thread for lens attachment

microtubes

light line axial

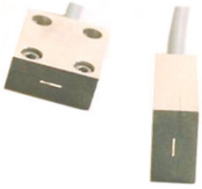

light line radial

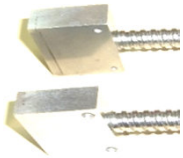

threaded sleeve & liquid probe

Sensor connection

FO coupler type "18/30" & "30"

FO coupler type "60"/"70"/"75"

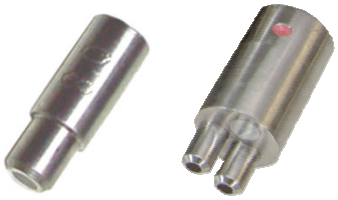

type 60 type 70/75

FO coupler type "90"

Light barrier fiber optics - radial

(2 mono-fiber arms, light output radial)

Order code	Reach (mm)	Sensor	End sleeves (mm)				Bracket
			type	L1	LS [4]	d1	
18/30-LZ 2/…[1] - MSC/Si [2] LS=..[4]	1.000	EFS 1800 [3]	end sleeve radial	20	14	8	Z 8
18/30-LZ 3/…[1] - MSC/Si [2] LS=..[4]	2.000	EFS 1800 3	end sleeve radial	20	14	8	Z 8
30-LZ 4/…[1] - MSC/Si [2] LS=..[4]	3.000	EFS 2000	end sleeve radial	25	14	10	Z 10
30-LZ 12/…[1] - MSC/Si [2] LS=..[4]	10.000	EFS 2000	end sleeve radial	25	14	10	Z 10
30-LQZ 12/…[1] - MSC/Si [2] Q=…[5]	6.000	EFS 2000	cross-section converter	depending on version			-
60-LZ 12P/…[1] CO [2] LS=[4] (pair)	16.000	EFS 2100-17…	end sleeve radial	20	16	12	Z 12
30/60-LZG [6] 12P/…[1] - MSC/Si [2] LS=..[3]	15.000 / 25.000 [7]	EFS 2000	end sleeve radial with thread	25	16 [6]	M6	Z 12

[1] when ordering please specify length (mm) ("-LX" … asymmetric arm length, e.g. 30-LZX 12/1.000/2.000 MSC)
[2] material protective coat: MSC … metal spiral protection hose
Si …. silicon/ steel spiral protection hose
CO … stainless steel / teflon hose
[3] with adapter ring also suitable for EFS 2000
4 LS …length of radial end sleeve (on request also other lengths possible)
[5] Q= … dimensions of light line L1 x L2; zB 40 x 0,25
[6] with protective glass - LS=16; optionally also available with lens cap (LS=30)
[7] without resp. with lens optics

Dimensions:

Sensor connection:

dual FO coupler"18/30"

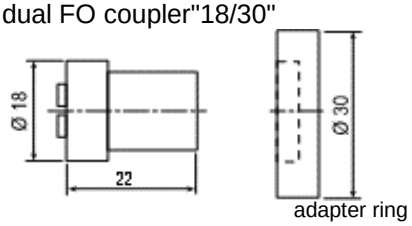

dual-FO-coupler "30"

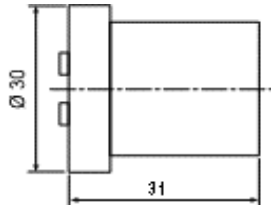

mono-FO-coupler "60"

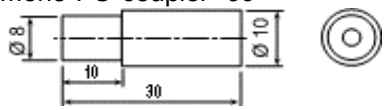

End sleeve

end sleeve radial

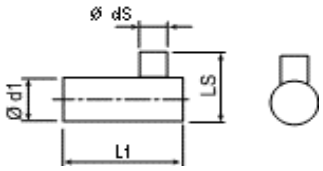

cross-section converter radial

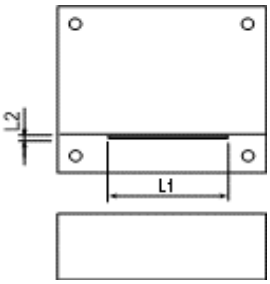

Light barrier fiber optics - axial

(2 mono-fiber arms, light output axial)

Order Code	Reach (mm)	Sensor	End sleeves (mm)					Bracket
			type	L1	L2	d1	d2	
18/30-L 1/…[1] - MSC/Si [2]	500	EFS 1800 [3]	microtubes *(optionally bent)*	25	100 [4]	6	1	Z 6
18/30-L 2/…[1] - MSC/Si [2]	800	EFS 1800 [3]	end sleeve axial	25	10	8	5	Z 8
18/30-L 3/…[1] - MSC/Si [2]	2.000	EFS 1800 [3]	end sleeve axial	25	10	8	5	Z 8
30-L 4/…[1] - MSC/Si [2]	3.000	EFS 2000	end sleeve axial	30	10	10	8	Z 10
30-L 12/…[1] - MSC/Si [2]	10.000	EFS 2000	end sleeve axial	30	10	10	8	Z 10
30-LQ 12/…[1] - MSC/Si [2] Q=[5]	6.000	EFS 2000	cross-section converter	depending on version				-
30-LG 12/…[1] - MSC/Si [2] G=[6]	13.000	EFS 2000	threaded sleeve	40	20	12	M8	-
CO [2] 12P/…[1] (pair)	16.000	FSP60A-….	end sleeve axial	30	10	10	8	Z 10

[1] when ordering please specify length (mm) ("-LX" … asymmetric arm length, e.g. 30-LZX 12/1.000/2.000 MSC)

[2] material protective coat: MSC … metal spiral protection hose
Si …. silicon/steel spiral protection hose
CO … stainless steel / teflon hose

[3] with adapter ring also suitable for EFS 2000

4 LS …length of radial end sleeve (on request also other lengths possible)

[5] Q= dimensions of light line: L1 x L2; zB 40 x 0,25

[6] G= dim. of threaded sleeve: M.. x l2; zB. M8 x 15

Dimensions:

Sensor connection:

dual-FO-coupler "18/30"

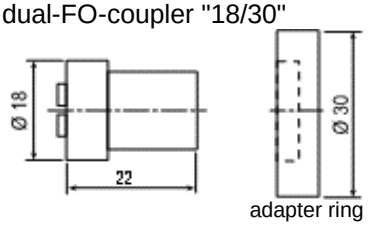

dual-FO-coupler "30"

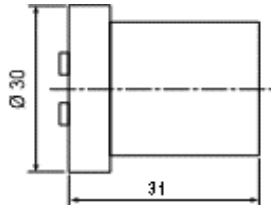

mono-FO-coupler "60"

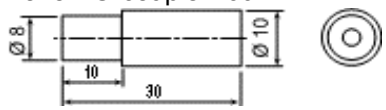

End sleeve

microtubes

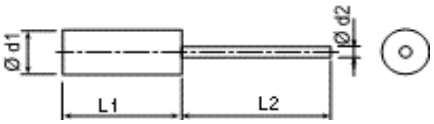

cross-section converter radial

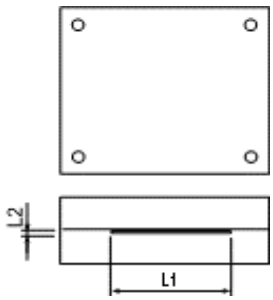

end sleeve axial

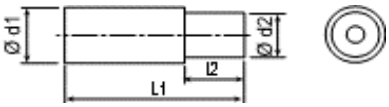

threaded sleeve

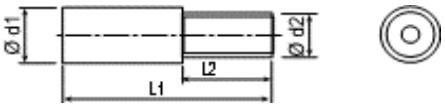

Reflectance fiber optics - radial

(1 dual-fiber arm, light output radial)

Order code	Reach (mm)	Sensor	End sleeve (mm)					Bracket
			type	L1	LS	d1	d2	
18/30-RZ 2/…[1] - MSC/Si [2] LS=..[4]	250	EFS 1800 [3]	end sleeve radial	20	14	8	6	Z 8
18/30-RZ 3/…[1] - MSC/Si [2] LS=..[4]	400	EFS 1800 [3]	end sleeve radial	20	14	8	6	Z 8
30-RZ 4/…[1] - MSC/Si [2] LS=..[4]	700	EFS 2000	end sleeve radial	25	14	10	8	Z 10
30-RZ 6/…[1] - MSC/Si [2] LS=..[4]	900	EFS 2000	end sleeve radial	20	14	10		Z 10
30-RZ 12/…[1] - MSC/Si [2] LS=..[4]	1.000	EFS 2000	end sleeve radial	20	14	12	10	Z 12
30-RQZ 12/…[1] - MSC/Si [2] Q=..[5]	1.000	EFS 2000	cross-section converter	depending on version				-

1 when ordering please specify length (mm)

[2] material protective coat: MSC … metal spiral protection hose
Si …. silicon/steel spiral protection hose

[3] with adapter ring also suitable for EFS 2000

4 LS= length of radial end sleeve (on request also other lengths possible))

[5] Q = dimensions of light line: L1 x L2; zB 40 x 0,25

Dimensions:

Sensor connection:	End sleeve
dual-FO-coupler "18/30" 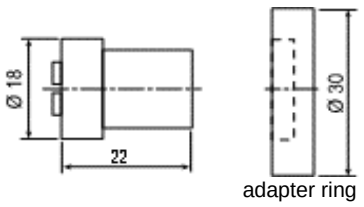 dual-FO-coupler "30" 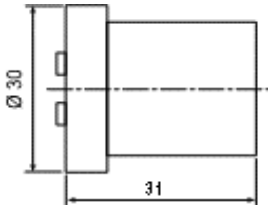 	end sleeve radial 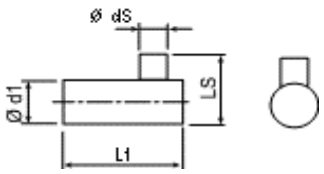 cross-section converter radial 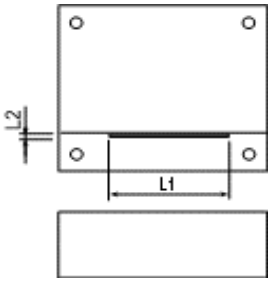

Reflectance fiber optics - axial

(1 dual-fiber arm, light output axial)

Order code	Reach (mm)	Sensor	End sleeve (mm)					Bracket
			type	L1	L2	d1	d2	
18/30-R 1/…[1] - MSC/Si [2]	30	EFS 1800 [3]	microtubes *(optionally bent)*	25	100 [4]	6	2	Z 6
18/30-R 2/…[1] - MSC/Si [2]	250	EFS 1800 [3]	end sleeve axial	25	10	8	5	Z 8
18/30-R 3/…[1] - MSC/Si [2]	400	EFS 1800 [3]	end sleeve axial	25	10	8	5	Z 8
30-R 4/…[1] - MSC/Si [2]	700	EFS 2000	end sleeve axial	30	10	10	8	Z 10
30-R 12/…[1] - MSC/Si [2]	1.000	EFS 2000	collar sleeve axial	30	10	12	8	Z 12
30-RQ 12/…[1] - MSC/Si [2] Q=..[5]	1.000	EFS 2000	cross-section converter	depending on version				-
30-RY 6/…[1] - CO/Si [2] (COR-SV 6/...)	900	EFS 2000	collar sleeve axial	25	10	9	7	Z 9
CO [2] 12/…[1] (pair)	2.000	FSP60A-….	end sleeve axial	30	10	10	8	Z 10

[1] when ordering please specify length (mm)

[2] material protective coat: MSC … metal spiral protection hose
Si ….silicon/steel spiral protection hose
CO … stainless steel / teflon hose

[3] with adapter ring also suitable for EFS 2000

[4] also shorter lengths possible (Execution on request of the customer)

[5] Q = dimensions of light line: L1 x L2; zB 40 x 0,25

Dimensions:

Sensor connection:

dual-FO-coupler "18/30"

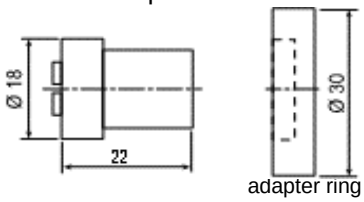

dual-FO-coupler "30"

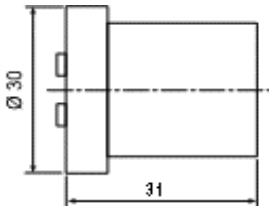

mono-FO-coupler "60"

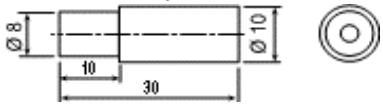

End sleeve

microtubes

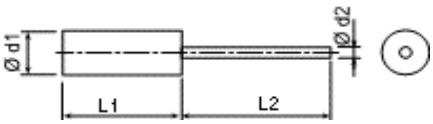

cross-section converter

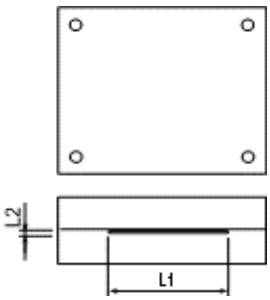

collar sleeve axial

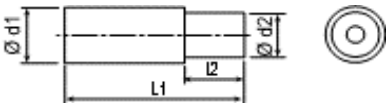

Quartz fiber optics for NIR applications

(1 multi-fiber arm or 1 mono & 1 multi-fiber arm, light output axial)

Order code	Sensor	End sleeve (mm)					Bracket
		type	L1	L2	d1	d2	
break detection *(single tier dryer)*							
75-RM 3N/3N//…[1] CO [2] *(from Jun.2018)*	FSM60Ax-xxx5	end sleeve axial	30	10	10	8	cantilever
70-L 3N//…[1] CO [2] (transmitter) & 60-L 3N/3N//…[1] CO [2] (receiver)*(until Jun.2018)*	FSM60Ax-xxx4	end sleeve axial	30	10	10	8	
humidity measurement							
90-RME 3N/3/3N/3//…[1] Si [2]	FSM30M-xxx4 / FSM60M-xxx4	end sleeve axial	30	10	12	8	Z 12
90-RMT 3N/3/3N/3//…[1] CO [2]	FSM90M-xxx4	T-head	38	13	23	27	cantilever
material monitoring, concentration measurement							
90-RMG 4x3N//…[1] Si [2]	FSM30N-xxx4 / FSM60N-xxx4	threaded sleeve	35	25	14	M8	-
applications in liquids							
90-RMS 4x3N//…[1] Si [2]	FSM30N-xxx4 / FSM60N-xxx4	probe [3]	50	10	20	M8	-

[1] when ordering please specify length (mm; tolerance: length < 2m: +0/-100mm; length > 2m: +0/-300mm)

[2] material protective coat: MSC … metal spiral protection hose
Si ….silicon/steel spiral protection hose

[3] S… liquid probe with reflector

Dimensions:

Sensor coupling

mono-FO-coupler "60"

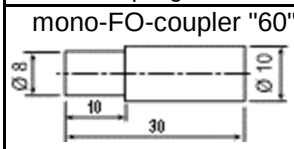

multi-FO-coupler "70"

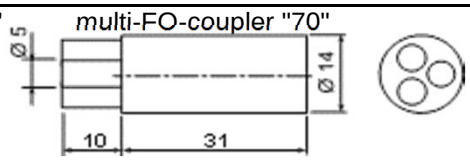

multi-FO-coupler "75"

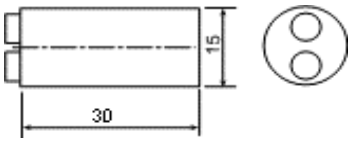

multi-FO-coupler "90"

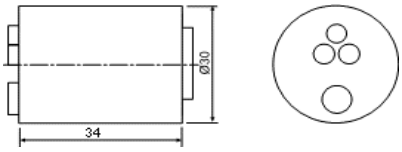

type"90-RMT"

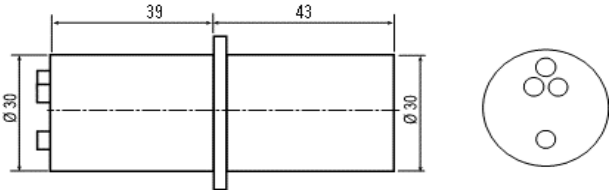

FO end on the measuring side

end sleeve axial

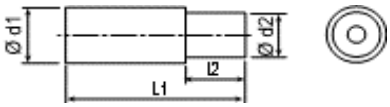

threaded sleeve

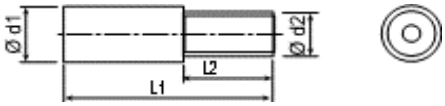

liquid´s probe

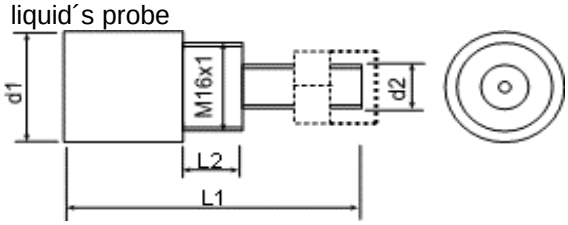

T-head

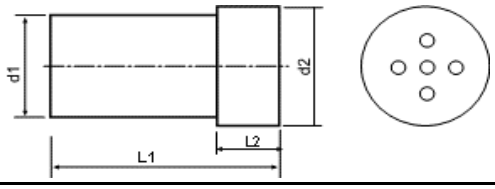

Illumination fiber optics

(1 mono-fiber arm, light output radial)

Order code	Light source	End sleeve (mm)					Bracket
		type [3]	L1	L2	d1	d2	
60-B-12/ ….[1] MSC/Si/CO [2]	KLQ 30	endsleeve axial	60	75	12	8	Z 8 mm
18-B-12/….[1] MSC/Si/CO [2]	LED 18	endsleeve axial	60	75	12	8	Z 8 mm
18-B 1/…[1] - MSC/Si [2]	LED 18	microtubes *(optionally bent)*	25	100	6	1	Z 6 mm
18-BX-12/….[1] MSC/Si/CO [2] X=360°	LED 18	360°-head	50	-	15	38	clamp

[1] when ordering please specify length (mm)

[2] material protective coat: MSC … metal spiral protection hose
Si ….silicon/steel spiral protection hose
CO … stainless steel / teflon hose

[3] on request other end sleeves from our range can be used for lighting FO

Dimensions:

Light connection:

mono-FO-coupler "60"

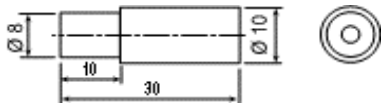

mono-FO-coupler "18"

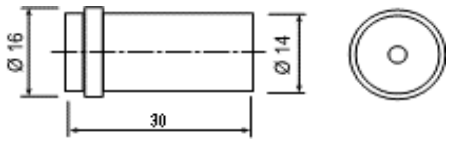

End sleeve

end sleeve axial

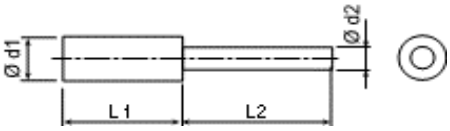

cross-section converter axial

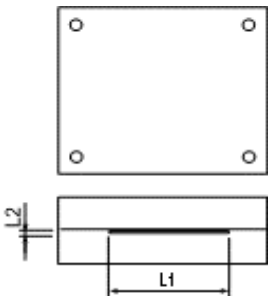

microtubes

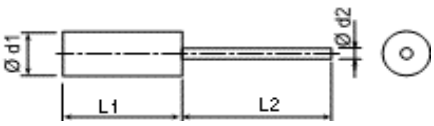

360°-head

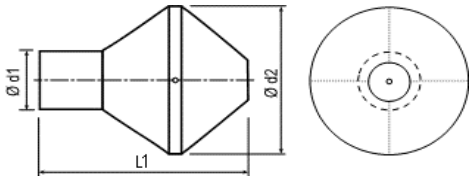

Accessories for light guides

Brackets

types Z6 .. Z12

Threaded adapter

... for M12, M18

Protective glass / lens attachment

lens attachment e.g. for: M6
Ø 8

protective glass e.g M12, M18,…
45x30
…

Wall ducts

gas-tight versions (for hazardous area)

Heat sink

Ball joint head

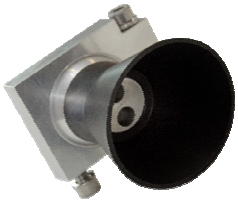

... with screw protection or tube

SENSORIK
Austria

- more than 30 years experience in sensor technics
- tailor made sensor solutions for toughest conditions
- high flexibility due to in-house manufacturing

- ✓ Highest quality due to in-house manufacture and manual confection
- ✓ 100% quality- & function control before delivery
- ✓ Repair of sensors and fibre optics in-house

SENSORIK Austria GmbH
A-4650 Lambach, Bahnhofstraße 68
T +43 7245/22001 F +43 7245/22001-22
E office@sensorikaustria.com
W www.sensorikaustria.com